ITEM NO.	PART NUMBER	DESCRIPTION	QTY.
1	050-0032	STEP, RISER 9"	8
2	110-1871	NUT, 5/16-18, CS, ECB, NY, Gr 8.8	6
3	110-1830	NUT, 3/8-16, NYLOK HEX	8
4	110-1740	NUT, 6-32, KEP	2
5	110-0575	Screw, 1/4-20, 1.25", HHC, HE,CS, ZP	1
6	110-0280	SCREW, #6-32, 0.875",PHM, SL, CS, ZI	2
7	050-2303	STICKER, Stairmaster, DECO, 45mm X 191mm	1
8	050-0300-XX	WHEEL, MOLD-IN COLOR	2
9	050-0297-XX	BODY PANEL, R, MOLD-IN COLOR	1
10	050-0296-XX	BODY PANEL, L, MOLD-IN COLOR	1
11	110-3098	NUT, 1/4-20, HEX, NYLOC	2
12	110-3140	SCREW, 5/16-18, 3/4", HHCS, CS, ZP, GR 5	9
13	110-3164	SCREW, M4x0.7x16L,PHT,PH,SS	2
14	110-3346	SCREW, 1/4-20, 5/8", SHCS, AS, ECB	2
15	110-3472	SCREW, 1/4-20, 1/2", TPHS, CS, ECB	14
16	110-3473	STUD, 3/8-16, 2.25", PRT'L THRD, CS, ZP, GR 5	8
17	110-3474	NUT, 5/16-24, LOCK, ZP	16
18	110-3475	SCREW, SET, 5/16-24, 3/8", SHSS, AS, ECB	2
19	110-3476	SCREW, SET, 3/8-16, 1", SHSS, AS, ECB	2
20	110-3623	Screw, 1/4-20, 0.5", RHM, SL, NY	2
21	110-3708	SCREW, 1/4-20, 5/8", HHFS, CS, ZP, Gr-8	4
22	120-0410	WASHER, 1/4, SAE FLAT	4
23	120-0463	WASHER, 3/8 X 1 OD	8
24	120-0490	WASHER, 5/16 SAE FLAT, 11/16" OD X 11/32" ID, .06 THICK	16
25	120-0800	SPACER, #6, Ø0.15" x Ø0.25"x 0.5"L, NY	2
26	130-1660	BEARING, 8 MM ID X 22 MM OD X 7 MM WIDTH	16
27	130-1780	PILLOWBLOCK, 3/4", BEARING	4
28	130-1792	CHAIN, 40NP-83 W/ML, INPUT DRIVE SM	1
29	130-1794	ASSY, CHAIN, DRIVE, #40, W MSTRLINK, E-SM	2
30	140-0210	TIE STRAP, 3.5"	3
31	140-3256	E-CLIP, EXT, Ø 0.25"	16
32	140-3489	SADDLE, WIRE, BARBED, PUSH	4
33	140-3490	GROMMET, OD: .44", ID: .25", TH: .25", PU	2
34	140-3501	ASSY, SPEED SENSOR, CL, RoHS	1
35	240-6914	ADAPTOR, F TYPE RT ANGLE, M/F	1
36	440-0282	FILTER, SINGLE PHASE, 250VAC, 6A	1
37	711-3285	RIVET, FLUSH, LOCK, PUSH, Ø6.5mm	68
38	711-3288-XX	FOOTPAD, REAR, LT, 8G	1
39	711-3289-XX	FOOTPAD, REAR, RT, 8G	1
40	711-3290	STOP, FOOT, RUBBER LT, STARMILL	1
41	711-3291	STOP, FOOT, RUBBER RT, STARMILL	1
42	711-3294-XX	SHROUD, LOWER, LT, STARMILL	1
43	711-3295-XX	SHROUD, LOWER, RT, STARMILL	1
44	711-3299	STEP, PLATFORM, STARMILL	8
45	711-3303-XX	COVER, HAND RAIL, LT, SM	1
46	711-3304-XX	COVER, HAND RAIL, RT, SM	1
47	711-3308-XX	SHROUD, COVER, UPPER, STARMILL	1
48	711-3312	PLATE, ADJUSTER,PILLOW BLOCK, STARMILL	4
49	711-3313	WELDMENT, SPROCKET, UPPER, STARMILL	1
50	711-3314	WELDMENT, SPROCKET, LOWER, STARMILL	1
51	711-3315	ENDCAP, LOWER, STARMILL	4
52	711-3316	PLATE, BEARING, WEIGHT, STARMILL	2
53	711-3320-XX	SHROUD, PAN, BELLY, STARMILL	1
54	711-3321	SHROUD, INNER, LWR, LT, STARMILL	1
55	711-3326	SHAFT, PIVOT, PEDAL, STARMILL	8
56	711-3327	SHAFT, PIVOT, SUPPORT, PEDAL, STARMILL	8
57	711-3328	BRACKET, SUPPORT, TRANS, STARMILL	1
58	711-3351	CABLE, EMI, ALT AND LCB, E-SM	1
59	711-3364	ASSY, BRACE, UPPER, KICK PANEL, LT, SM	1
60	711-3365	ASSY, BRACE, LOWER, KICK PANEL, LT, SM	1
61	711-3366	ASSY, BRACE, UPPER, KICK PANEL, RT, SM	1
62	711-3367	ASSY, BRACE, LOWER, KICK PANEL, RT, SM	1
63	711-3393	LIMITER, PILLOW BLOCK, SM	2
64	711-3427	SHROUD, INNER, LT, LONG, SM	1
65	711-3428	SHROUD, INNER, RT, LONG, SM	1
66	711-3458	ASSY,CONNECTOR,VLAD	1
67	711-3460	ELEC PLATE ASSY, BRAKE, SM	1
68	711-3463-XX	FRONT SHIELD, LOWER, GAUNTLET	1
69	711-3494	CABLE, MAIN INTERFACE, EXTENDED, SM	1
70	711-3495	CABLE, POWER INPUT, GAUNTLET	1
71	711-3496	CABLE, COAX, M-M, GAUNTLET	1
72	711-3497	ASSY, HARNESS, CSAFE, GAUNTLET	1
73	711-3510	ASSY, TRANS W/ BRAKE & ALT, 8G	1
74	711-3511-XX	ASSY, FRAME, W/ BRAKE, NO BRKT, 8G	1
75	731-0294	Washer, M8, Ø8.6xØ16.6x2.2mm, NY	32
76	731-0373	WASHER,PLAIN,M6	12
77	740-0013	NUT, M5x0.8, SS, NYLOC	2
78	740-6512	SCREW,M5 X .8, 15mm, PHM, PH	2
79	740-7304	NUT, RIVET, M6	10
80	740-7842	WASHER, 8.4mmID X 21mm OD X 1.6mm THK	1
81	740-7898	Screw, M6x1.0, 20mm, SHC, HK, CS, ECB, Cl. 10.9	12
82	711-3322	SHROUD, INNER, LWR, RT, STARMILL	1
(F) 83	711-3329	ISOLATOR, GEARBOX, RUBBER, STARMILL	1

REVISION HISTORY

REV	DATE	DESCRIPTION	ECO	BY
A	11/10/2014	PRODUCTION RELEASE	14790	SV
B	9/10/2015	ADDED : 440-0282, 711-3499, 711-3500, 711-3501, 740-0013, AND 740-6512	15083	SV
C	5/24/2016	REMOVE: 110-0570 (4), 110-1833 (1), 110-3477 (1), 120-0420 (4), 120-3030 (2), 711-3288 (1), 711-3289 (1), 711-3332 (1), 711-3361 (1), 711-3453 (1); ADD: 110-3708 (4), 140-3490 (2), 711-3288-XX (1), 711-3289-XX (1), 711-3328 (1), 711-3510 (1); CHG QUANTITY: 110-3140 (IS 9, WAS 10); 120-0410 (IS 4, WAS 8), 740-7842 (IS 2, WAS 1); REMOVE NOTES 3,5, AND 8; ADD NOTES 14 AND 15; ADD FRONT VIEW ON SHEET 2; ADD ALIGNMENT VIEW ON SHEET 4	15358	MMG
D	9/15/2016	REPLACE 711-3457-XX WITH 711-3511-XX; REMOVE: 711-3352 (1), 711-3501 (1); ADD 711-3495 (1)	15551	MMG
E	10/3/2016	REMOVE: 711-3354 (1), 711-3355 (1); REPLAECE 711-3499 (1) WITH 711-3496 (1); REPLACE 711-3500 (1) WITH 711-3497 (1); ADD NOTE 16	15563	MMG
F	10/22/2018	ADD: 711-3329 (1)	15977	MMG

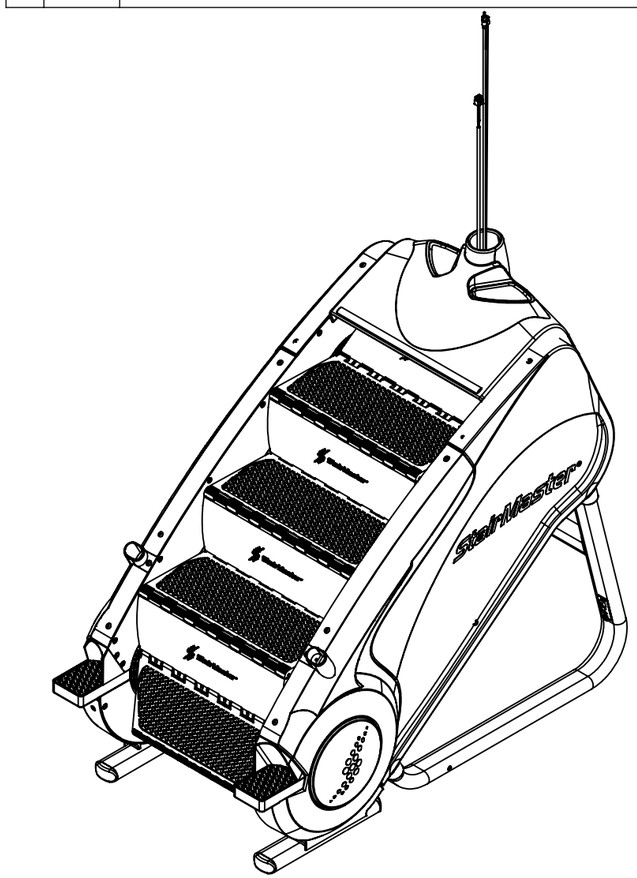

NOTES:
1. COLOR DESIGNATOR PER-XX SPECIFIED IN PARENT SKU

DOCUMENT STATUS:

NOTICE OF PROPRIETARY INFORMATION

THIS DOCUMENT SHALL NOT BE REPRODUCED NOR SHALL THE INFORMATION CONTAINED HEREIN BE USED BY OR DISCLOSED TO OTHER EXCEPT AS EXPRESSLY AUTHORIZED BY CORE HEALTH & FITNESS, LLC.

MATERIAL
SEE BOM

FINISH
SEE NOTES

VENDOR: LAND AMERICA P/N:

THIRD ANGLE PROJECTION

	INITIAL	DATE
DRAWN	SV	11/6/2014
CHECKED		
APPROVED		
	U.O.M.	MM

CORE HEALTH & FITNESS, LLC
4400 NE 77th Ave., Suite 300
Vancouver, WA 98662

CORE PART NO: 711-3455-XX
REV: F

TITLE: ASSY, BASE, W/ BRAKE, GAUNTLET

SCALE: 1:16 | SHEET 1 OF 4 | SHEET SIZE: B

NOTES: (CONT.)
2. CLEAN MATING SURFACE WITH 90-100% DENATURED ALCOHOL PRIOR TO ADHERING LOGO

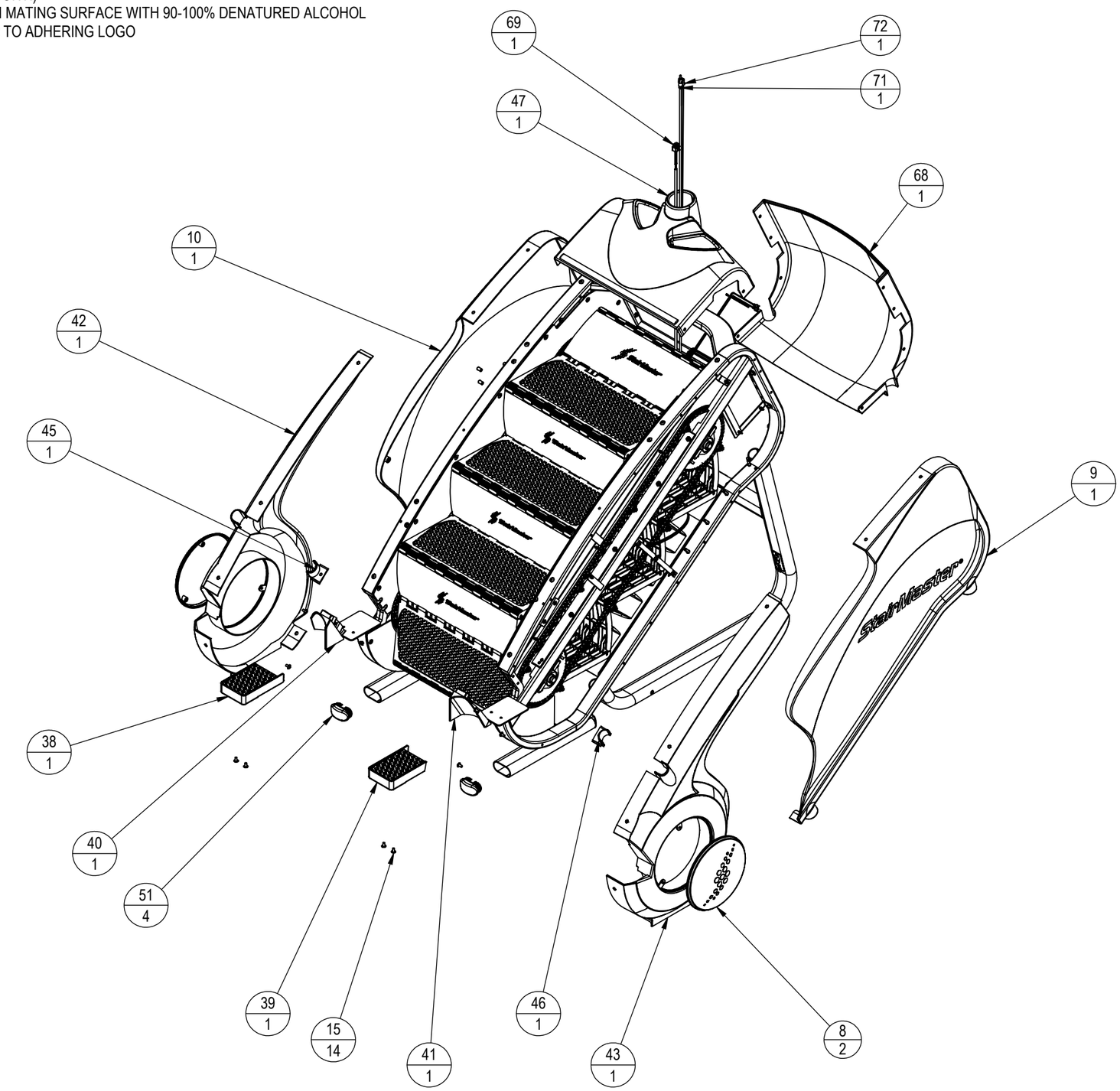

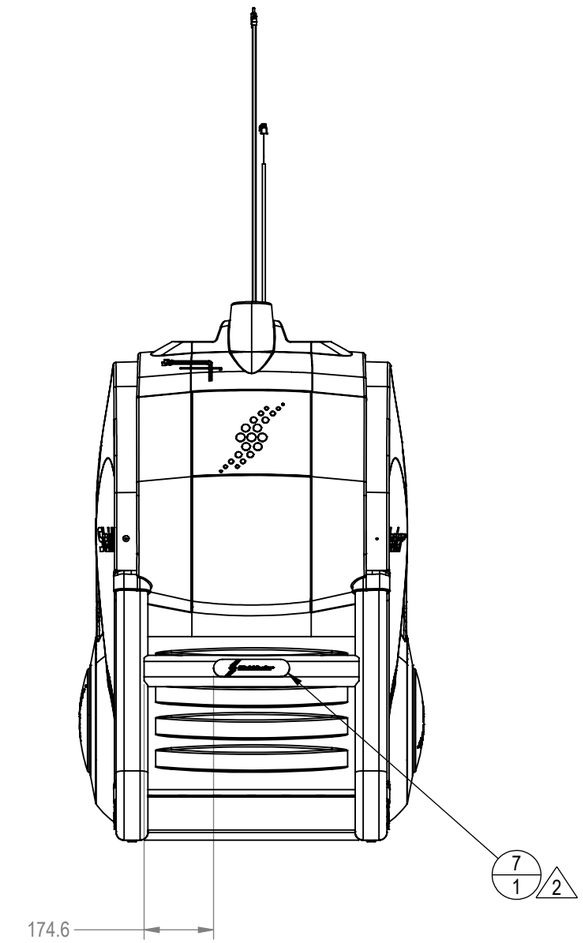

CORE HEALTH & FITNESS, LLC
4400 NE 77th Ave., Suite 300
Vancouver, WA 98662

CORE PART NO	REV
711-3455-XX	F

TITLE
ASSY, BASE, W/ BRAKE, GAUNTLET

SCALE: 1:15	SHEET 2 OF 4	SHEET SIZE: B

NOTES: (CONT.)

3. ~~DELETED~~
4. TORQUE TO 8-10 LB-FT/10-13Nm
5. ~~DELETED~~
6. TORQUE TO 25-27 LB-FT/34-37Nm
7. CHAIN SLACK IS 0.5-0.75in/12.7-19.1mm MEASURED IN THE CENTER OF THE UNTENSIONED SIDE OF THE CHAIN.

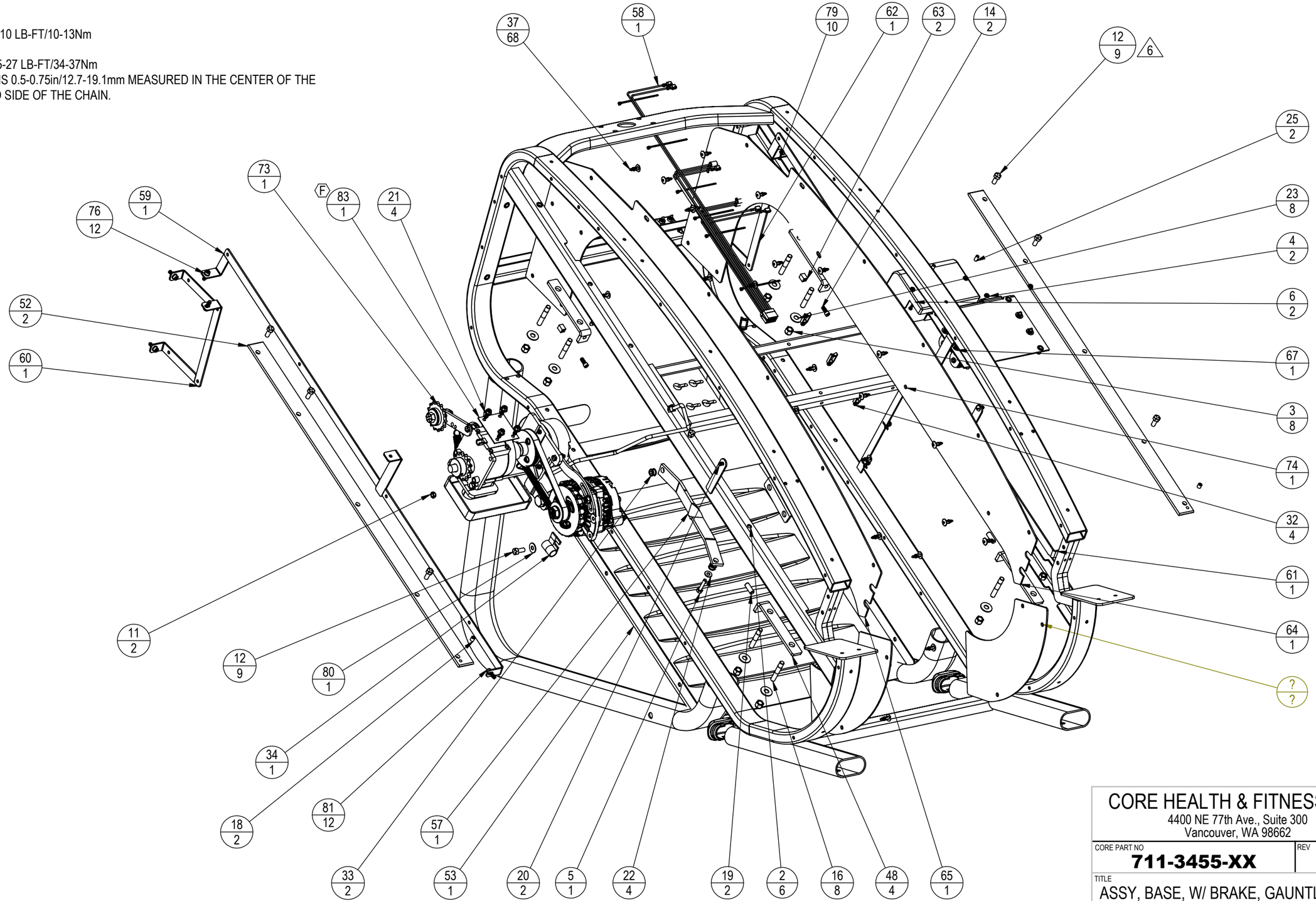

CORE HEALTH & FITNESS, LLC
4400 NE 77th Ave., Suite 300
Vancouver, WA 98662

CORE PART NO	REV
711-3455-XX	**F**

TITLE
ASSY, BASE, W/ BRAKE, GAUNTLET

SCALE: 1:8 | SHEET 3 OF 4 | SHEET SIZE: B

NOTES: (CONT.)

~~8. DELETED~~
9. TORQUE TO 8-10 LB-FT/10-13Nm
10. TORQUE TO 30-32 LB-FT/41-43Nm
11. TORQUE TO 25-27 LB-FT/34-37Nm
12. CHAIN SLACK IS 0.5-0.75in/12.7-19.1mm MEASURED IN THE CENTER OF THE UNTENSIONED SIDE OF THE CHAIN.
13. PRESS IN TWO(2) OF 140-3559 INTO 711-3437 WITHIN 711-3251-XX REFER TO MANUFACTURER FOR PROPER INSTALLATION PROCESS
14. ALIGN SPROCKETS TO CENTER OF CHAIN LINE
15. TORQUE TO 12 LB-FT/ 16Nm
16. CABLE HIDDEN FOR DEPICTION ONLY. FULL CABLE APPROX. 2.4m IN LENGTH

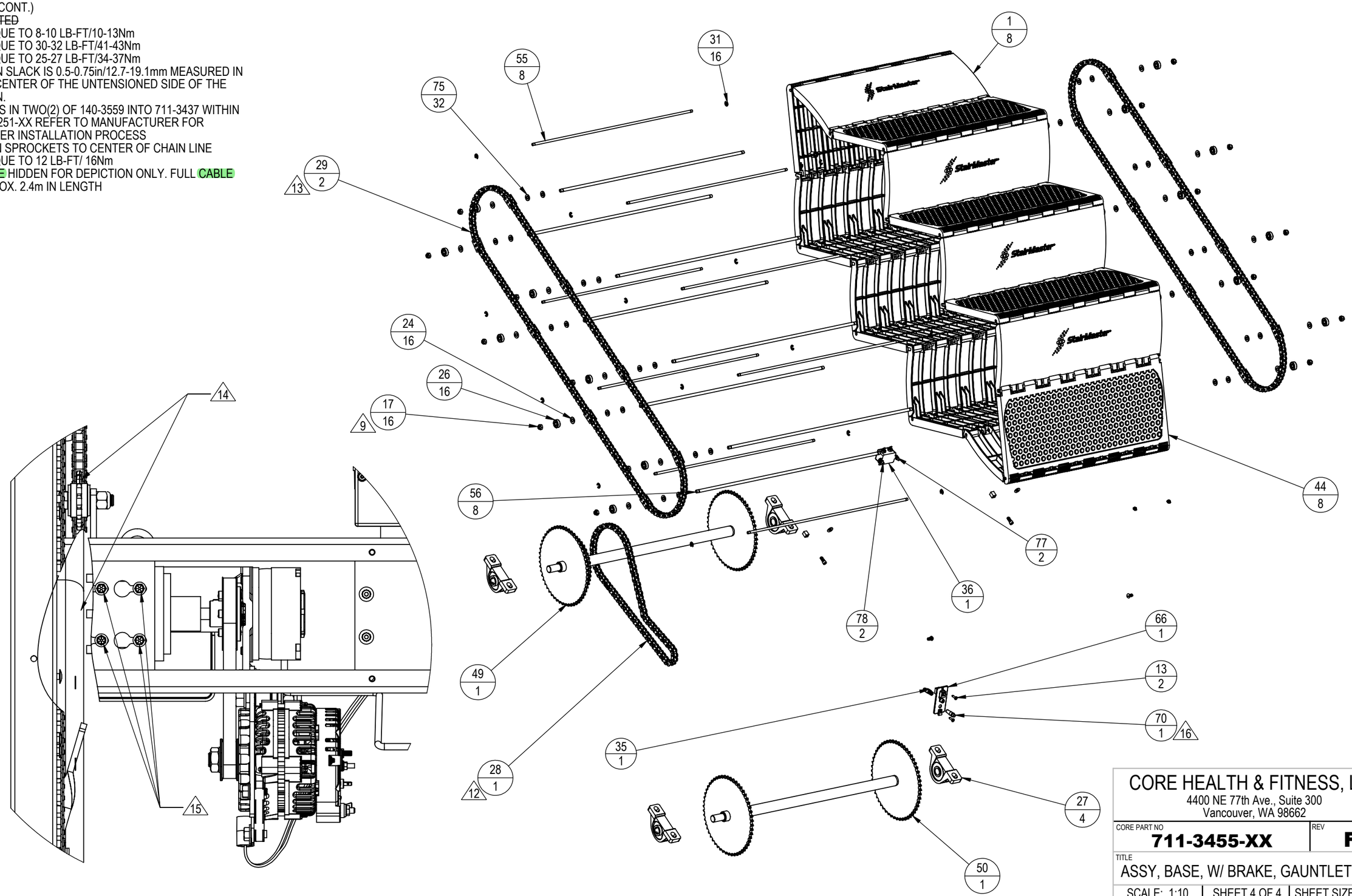

CORE HEALTH & FITNESS, LLC
4400 NE 77th Ave., Suite 300
Vancouver, WA 98662

CORE PART NO	REV
711-3455-XX	**F**

TITLE
ASSY, BASE, W/ BRAKE, GAUNTLET

SCALE: 1:10	SHEET 4 OF 4	SHEET SIZE: B